SMARTYCAM

User Manual

Racing Data Power

Dear Customer,

SmartyCam, the new camcorder with data overlay, descends from the great AIM experience in developing data acquisition systems, mainly for motorsports applications.

SmartyCam allows to review racing performances on PC or TV, merging crystal clear images with graphical data coming from integrated GPS and three-axial accelerometer, as well as from ECU (Engine Control Unit from here onward ECU) or from an AIM logger: that is why **SmartyCam** can be used in any situation, on any sort of vehicle.

Acquired data can be overlaid to frames in a great variety of formats, configurable by the user. On a Micro SD card hours of movies/sounds/data can be saved: ratio is approximately 1 Giga = 1 hour.

It is recommended to periodically check www.smartycam.com for software and/or firmware updates or – recommended option – subscribe the www.smartycam.com newsletter to receive all updates in real time.

Warning: this user manual is regularly updated. All new versions can be found on www.smartycam.com. Please make sure your manual is the latest version available: the issue number of each manual is reported on the top of the page.

INDEX

INTRODUCTION 4
Chapter 1 – SmartyCam: kit and optional items 5
1.1 – SmartyCam kits 5
1.2 – ECU bridge kits 5
1.3 – SmartyCam optional items: cables and external microphone 6
Chapter 2 – Data sampled by SmartyCam stand alone/slave 7
Chapter 3 – SmartyCam connections 8
3.1 – Connecting SmartyCam stand alone 8
3.2 – Connecting SmartyCam in Slave expansion mode with ECU Bridge 9
3.3 – SmartyCam in Slave expansion mode with AIM loggers 10
Chapter 4 – SmartyCam battery charging 11
4.1 – Battery charging via USB 11
4.2 – Battery charging via connector 11
Chapter 5 – SmartyCam configuration 12
Chapter 6 – How to use SmartyCam 13
6.1 – "Battery and Memory Status" field 13
6.2 – How to switch SmartyCam on/off 14
6.3 – SmartyCam Menu 14
6.3.1 – "SETTINGS" option 15
6.3.1.1 – Accelerometer calibration: "ACCEL CALIBR" option 15
6.4 – How to record videos 16
6.4.1 –Manual recording 16
6.4.2 –Automatic recording 17
6.5 – SmartyCam recording support 17
Chapter 7– Downloading data and viewing SmartyCam videos 18
7.1 – Downloading data 18
7.2 – Viewing SmartyCam videos 18
7.2.1 – Viewing SmartyCam videos on the PC 18
7.2.2 – Viewing SmartyCam videos on the TV 18
Chapter 8 – SmartyCam Maintenance 18
Appendix "A" – Technical specifications 19
Appendix "B" – SmartyCam Pinout 20
Appendix "C" – SmartyCam cables Pinout 21
Appendix "D" – ECU Bridge Pinout 23
Appendix "E" – SmartyCam with external power 25
Appendix "F" – Connection scheme with AIM loggers 26
F.1 – SmartyCam – ECU Bridge connection scheme 26
F.2 – SmartyCam – MXL connection scheme 28
F.3 – SmartyCam – EVO3 connection scheme 31
F.4 – SmartyCam – EVO4 connection scheme 34
F.5 – SmartyCam – MyChron4 connection scheme 37

INTRODUCTION

SmartyCam features three different working modes.

Stand alone: for non-motorsport applications or for motorsport applications in case there is no Engine Control Unit (ECU) nor AIM data acquisition system (from here onward: logger).

Slave connected to the vehicle ECU: for motorsport applications to sample data out coming from the ECU but with no need or possibility of sampling data coming from additional sensors. In this case an ECU Bridge is required.

Slave connected to an AIM logger: for motorsport applications in case a detailed analysis of performances is needed, using also additional sensors. In this case the ECU bridge is not required because connection to the vehicle ECU is made using the AIM logger.

Chapter 1 – SmartyCam: kit and optional items

SmartyCam package includes a complete kit that permits standard usage: in this manual some optional items are also shown, which can be useful in particular situations.

1.1 – SmartyCam kits

Stand alone kit: X90SMYC00
1 – SmartyCam (metallic grey or glossy red);
1 – power supplier;
1 – adapter
1 – power cable;
1 – USB cable for data download and battery charge;
1 – 4 Giga Micro SD;
1 – user manual;
1 – CD containing **SmartyConf** software and USB driver.

Slave kit with ECU Bridge or AIM logger (EVO3 Pro/Pista, EVO4, MXL Strada/Pista /Pro05, MyChron4):

- X90SMYCEC2 with 2m power cable + CAN.
- X90SMYCEC4 with 4m power cable + CAN.

1 – SmartyCam (grey metallic or glossy red);
1 – power supplier;
1 – adapter
1 – 2m or 4m power cable + CAN (for AIM logger/ECU Bridge connection);
1 – USB cable for data download and battery charge;
1 – 4 Giga Micro SD;
1 – user manual
1 – CD containing **SmartyConf** + **Race Studio 2** software and USB drivers.

Warning: to use SmartyCam in slave working mode it is necessary to buy an ECU Bridge or to have the appropriate AIM logger.

1.2 – ECU bridge kits

There are two available ECU Bridges, required to connect **SmartyCam** to the vehicle ECU. Their part number changes according to the communication protocol they are equipped with.

- ECU Bridge with CAN/RS232 communication protocol: X90BGGPI2R
- ECU Bridge with CAN/K Line communication protocol: X90BGGPI2K

Each ECU Bridge kit includes:

1 – ECU Bridge
1 – USB cable.

1.3 – SmartyCam optional items: cables and external microphone

SmartyCam optional tools can be connected to it using the 7 pins connector placed on the camcorder rear and shown here below.

SmartyCam kit includes a power cable used to charge the battery: in order to connect it to an external power supply or to an additional external microphone it is necessary to buy optional cables.

The **external power source** can be useful to stand alone users to avoid **SmartyCam** internal battery consumption. In case of slave use, on the contrary, connection to the vehicle battery is compulsory: the cable is included in the kit (the optional cable is necessary only to connect an additional external microphone).

Use of an additional external microphone can be useful, for instance, to the driver that wants to communicate with its staff.

- Power cable with CAN and microphone: this cable allows SmartyCam to connect to an external 12V power source, to enable an external microphone, automatically mixed with the internal stock one, and to connect via CAN to an AIM logger or an ECU Bridge.
- External microphone: additional microphone automatically mixed to the stock one. It plugs directly in the 7 pins connector placed on the camcorder rear.

Chapter 2 – Data sampled by SmartyCam stand alone/slave

As said before, according to its working mode, **SmartyCam** provides different information.

In **Stand Alone** mode**, SmartyCam** gets data coming from integrated GPS and three-axial accelerometer:

- position;
- GPS speed;
- acceleration
- lap time;
- distance;
- track mapping.

In connection to an external data acquisition system, like an AIM logger (**EVO3 Pro/Pista**, **EVO4**, **MXL Strada/Pista/Pro05** or **MyChron4)** or an ECU (via **ECU bridge**), **SmartyCam** can visualize in graphical overlay:

- all info acquired in Stand Alone version;
- all info coming from the vehicle Engine Control Unit connected to AIM logger;
- all info acquired by AIM logger (RPM, more speeds, LCU-ONE Lambda value, engaged gear, temperatures, pressures, etc…).

WARNING: for further useful information check:

www.aim-sportline.com **website download area to know which ECU's are supported by AIM logger and their connection/communication protocols;**
Race Studio Configuration user manual to understand how to configure AIM loggers, ECU Bridge included;
each AIM logger user manual.

Chapter 3 – SmartyCam connections

The alternative **SmartyCam** modes (Stand Alone or Slave Expansion) require different connection procedures.

3.1 – Connecting SmartyCam stand alone

SmartyCam stand alone can be connected in different ways:

- connection to the external power: use the 7-pins connector highlighted in the image above and connect the power cables to a 12 Volts power source i.e. the vehicle battery.
- connection to the external microphone: the external microphone plugs directly in the 7 pins connector highlighted in the image here above.
- connection to optional cables and external microphone: use the 7-pins connector highlighted in the image here above and connect the power cables to an external 12 Volts power source.

Warning: if SmartyCam is connected to an external power not connected to the vehicle master switch nor to the sampled GPS speed and auto power off has not been set (paragraph 6.1), it is necessary to manually power on/off SmartyCam when switching on/off the vehicle.

3.2 – Connecting SmartyCam in Slave expansion mode with ECU Bridge

In order to receive the info provided by the vehicle ECU without any additional logger, **SmartyCam** must be used in Slave expansion mode and connected via CAN to an ECU Bridge, using the 7-pins connector placed on the product rear. Today ECU Bridges are available for CAN, RS232 e K Line communication protocols.

Please refer to appendix “B” and “D” to know **SmartyCam** and **ECU Bridge** pinout.

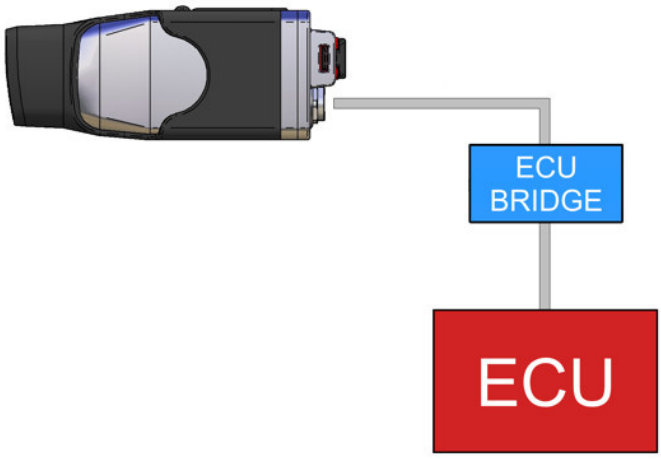

Warning: please refer to Race Studio Configuration user manual for more info about ECU Bridge configuration, and to www.aim-sportline.com documentation download area for more info about ECU supported by AIM systems and their communication/connection protocols.

3.3 – SmartyCam in Slave expansion mode with AIM loggers

SmartyCam can visualize even data sampled by an AIM logger (EVO3 Pro/Pista, EVO4, MXL Strada/Pista/Pro05 or MyChron4) and by the vehicle ECU. In this case it is necessary to connect **SmartyCam** via CAN to the logger, using the power and CAN cable to be inserted into the 7-pins connector placed on the camcorder rear.

Please refer to appendix "B" of this manual to know SmartyCam pinout and to the user manuals of each AIM logger to know its pinout.

The image below shows i.e. **SmartyCam** connected to an **EVO4**.

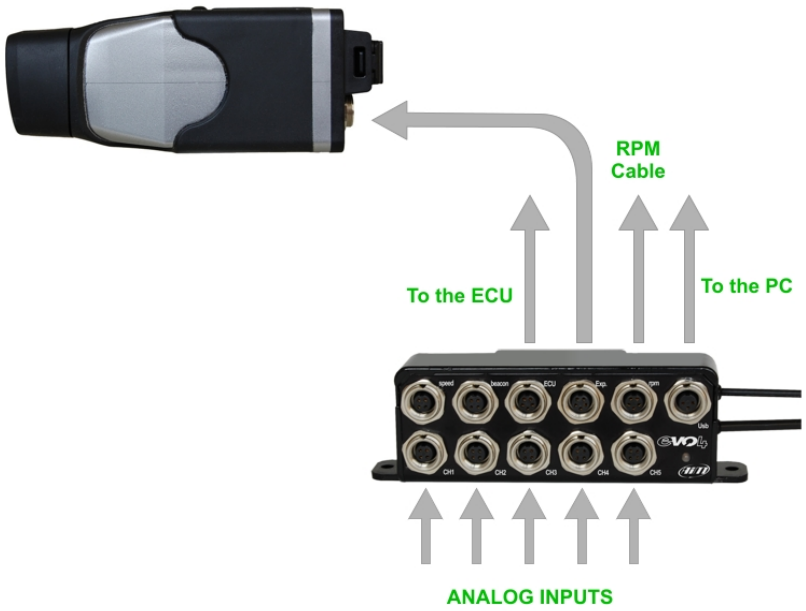

Chapter 4 – SmartyCam battery charging

SmartyCam is supplied with a 2000mAh 3.7 Volt rechargeable lithium battery. It can be charged using both the 7-pins connector and the USB port highlighted in the image below on the right. Connect **SmartyCam** to an external power source.

The battery charge status is shown in any **SmartyCam** page. Below on the left the related field is shown.

4.1 – Battery charging via USB

SmartyCam battery charging via USB has two possible options.

Socket charge (recommended):

- connect SmartyCam (switched off) to the power supplier using the cable included in the kit: it has to be plugged in the 7-pins connector placed in the product rear;
- insert the power supplier plug in the socket.

In case of **PC charge** via USB (not recommended): connect **SmartyCam** (powered off) directly to the PC on, using the cable included in the kit. It is recommended not to use a USB hub. It is also recommended to use exclusively a 2.0 USB port.

Please do not connect SmartyCam to the PC unless having installed SmartyConf software.

Warning: not all Personal computers USB ports provide enough power to charge SmartyCam and anyway, due to the power supply limitation of the PC, battery charging is longer. That is why socket charge is recommended.

4.2 – Battery charging via connector

SmartyCam battery can be charged using the external power cable connected to the rear connector of the camcorder.

Chapter 5 – SmartyCam configuration

In order to configure **SmartyCam** data overlay (selection of data to visualize, their layout and position) **SmartyConf** software – expressly developed by AIM – needs to be used.

This software is provided with a CD included in **SmartyCam** kits and can be downloaded from www.smartycam.com, download area.

To configure **SmartyCam** connect it to the PC:

WARNING: it is strictly necessary to install SmartyConf software before SmartyCam connection to the PC (v. SmartyConf user manual downloadable from www.smartycam.com)

- set the preferred data overlay;
- transmit the new configuration to **SmartyCam**;
- switch the camera off and on again
- **SmartyCam** will automatically set that configuration.

Refer to SmartyConf user manual for information about data overlay configuration.

SmartyCam slave needs its master (AIM logger or ECU Bridge) configuration through **Race Studio 2** software, included in both the slave kits with 2m and 4m power cable).

Please note: SmartyCam configuration is independent from its master configuration: it is thereby unnecessary to modify it changing SmartyCam master.

Chapter 6 – How to use SmartyCam

SmartyCam is managed using the three buttons placed above the display: 1,2 and 3 in the image below.

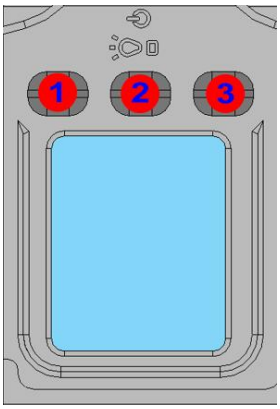

The menu on the display shows the functions related to each button, close to the button itself.

All **SmartyCam** pages are made up of three parts:

- **top of page** menu functions are shown;
- in the **middle of the page** specific info are shown;
- in the **lower part** the "Battery and Memory Status" field is shown.

6.1 – "Battery and Memory Status" field

"**Battery and memory Status**" field constantly shows the level of battery charge and the remaining memory available for recording. In "On line" and "GPS status" the GPS signal strength is shown, too.
The above indicator refers to the available memory and shows in black the used part and in grey the available one. When available memory is lower than 300 kB the black part becomes red. The number right of the bar is the available space in Giga (in the image below **SmartyCam** works with a 4 Giga Micro SD).
The below indicator shows the battery charge status. The number on the right switches between battery tension – **SmartyCam** working range is between 4.1 and 3.5 V – and percentage of available battery (image here below on the right).

6.2 – How to switch SmartyCam on/off

SmartyCam can be switched on in two ways:

- pressing "**2**" button, or
- connecting the external power cable to **SmartyCam**: as soon as the camcorder receives the 12 V power, will automatically switch on.

SmartyCam can be switched off in the following ways:

- pressing "**2**" button any time "**Off**" option is available
- pressing "**2**" button for 10 seconds. This forced option is to be used JUST in case of camcorder lock, as it can lead to cancellation of some of the latest recorded data/images
- automatic switch-off: if still for 15 minutes, **SmartyCam** will switch automatically off. **NOTE**: this function can be disabled in the "**SETTINGS"** menu (**"AUTO POWEROFF"** function).

6.3 – SmartyCam Menu

When **SmartyCam** is switched on, three options appear:

- **Rec** recording process will start (v. paragraph 6.4)
- **Off** the camera will switch off (v. paragraph 6.2)
- **Menu** several options appear

Clicking "**Menu**" a new page will appear, showing (in loop) the following options:

PLAYER	It allows to manage recorded videos: "**Down**" scrolls the list of videos and "**Sel**" selects the desired video. Once selected, it is possible to view it ("**Play**") or cancel it ("**Del**")
GPS STATUS	It shows the connected satellites and the signal strength (good or weak)
SETTINGS	It allows to set several key parameters (v. paragraph 6.3.1)
LAP MNGMT	It shows the geographic coordinates of the place where the camcorder is positioned. It permits to fix the starting point of GPS lap times (selecting "**Fix**"): once a point is fixed, every time SmartyCam will pass there, a laptime will be registered.
DASH	Info page: it shows the data acquired by the camera (if stand alone) or by the external acquisition system, ECU or logger (if slave)

On the top of this page, the functions "**Down**" (to scroll the options), "**Exit**" (to go back to the previous page) and "**Sel**" (to select the desired option) appear.

6.3.1 – "SETTINGS" option

As anticipated, by clicking "**SETTINGS**" several options appear:

LANGUAGE	It permits to choose the desired language
DISPLAY T.out	Enabling this function it is possible to avoid useless battery consumption, switching off the display after 30". Registration will not be stopped.
TIME SETTING	It allows to choose the time zone and to enable/disable daylight saving time.
CONFIG	It allows to choose a pre-defined overlay configuration among a list of available options (i.e. USA kart or Euro kart, car, airplane, etc.)
INFO	Info page where some camcorder technical data are shown.
AUD/VID SET	It allows to set some Audio/Video options useful to maximize recording quality in case of: SmartyCam use onboard or on vehicle roof, zoom or not, with/without external microphone
ACCEL CALIBR	This option allows to calibrate the 3D accelerometer, in order to get correct acceleration data and fine tune video frames. (paragraph 6.3.1.1.)
AUTO REC	This option allows to choose manual vs. automatic recording: in this case recording process will start as soon as some threshold parameters are reached (paragraph 6.4.2).
AUTO POWEROFF	It allows to disable automatic power-off of the camcorder after 15 minutes inactivity (paragraph 6.2)

6.3.1.1 – Accelerometer calibration: "ACCEL CALIBR" option

Great attention must be given to accelerometer calibration procedure, because it impacts either on acceleration data accuracy and on correct frame choice.
In order to set calibration parameters, place the camcorder on a plane surface, switch it on, select "**ACCEL CALIBR**" option and then click on "**Calibr**".
In order to keep correct calibration parameters even once SmartyCam is installed on the vehicle, the following steps must be followed:

- Install the camera
- Select "**ACCEL CALIBR**"
- The 2 coordinate axis appear: correct calibration point can be immediately fixed clicking "**Calibr**"
- It is also possible – clicking "**Prev**" – to preview the frame on the display: when this frame is ok, click "**Calibr**" to fix calibration point.

6.4 – How to record videos

It is possible to record images both manually and automatically

6.4.1 –Manual recording

Immediately after switching SmartyCam on, the display shows the following page:

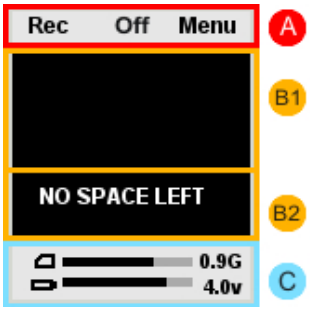

The **keyboard** (**"A"**) allows to:

- start recording, pressing "**Rec**";
- switch **SmartyCam** off, pressing "**Off**";
- enter "Menu Status", pressing "**Menu**".

The **mid of the page ("B")** is divided in two parts:

- **above ("B1")** the real time image frame is visible;
- **below ("B2")** info related to recording process are shown: "**Pause**" registration and "**Record**" (recording time is shown).

To start recording, press "**Rec**": **SmartyCam** will show this page:

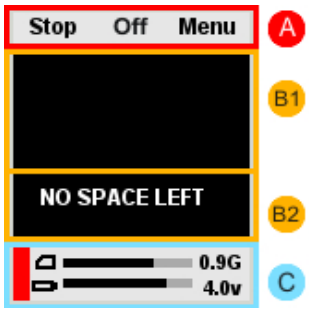

The **keyboard** ("**A**") allows to:

- stop recording pressing "**Stop**": SmartyCam comes back to "Online Status";
- switch SmartyCam off, pressing "**Off**";

WARNING: NEVER remove the Micro SD until SmartyCam is completely switched off

The **lower part ("C")** is "**Battery and Memory Status**".

- When **SmartyCam** is recording a red indicator appears on the left .
- After a pre-defined time of inactivity the display will switch off (see paragraph 6.3.1).

6.4.2 –Automatic recording

It is possible to set the automatic recording option ("**AUTO REC**"). This permits to start/stop recording without manual input. That's how it happens:

- **In slave mode** (SmartyCam connected to an AIM logger): the logger transmits a start/stop recording input to Smartycam, as soon as it detects RPM's or a speed higher/lower than 10 km/h.
- **In stand alone mode**: recording starts/stops automatically when speed is more/less than 10 km/h or acceleration exceeds 0.2 G.

6.5 – SmartyCam recording support

SmartyCam kits include a 4 Giga Micro SD but it can support up to 16 Giga.

Warning: use only High Capacity Micro SD like this:

Warning: never remove the micro SD from SmartyCam while recording. To remove the micro SD stop recording and wait for 20 seconds or start power off procedure and wait until SmartyCam has completely shut down (paragraph 6.1).

Chapter 7– Downloading data and viewing SmartyCam videos

7.1 – Downloading data

SmartyCam allows to download data either via USB (connecting the camcorder to the PC using the cable provided with the kit) either through the micro SD placed in the **SmartyCam** rear, which will have to be inserted in the PC USB port. It is recommended to use exclusively a 2.0 USB port.

Warning: when inserting/removing the Micro SD please make sure the flip on the rear is firmly closed.

7.2 – Viewing SmartyCam videos

Videos recorded on **SmartyCam** micro SD are **.avi files with H.264 codec** and can be seen both on PC and on TV.

7.2.1 – Viewing SmartyCam videos on the PC

To see the videos on a PC display just remove the micro SD from **SmartyCam** switched off, place it in the reader (or in a portable one connected to the PC like any USB pen drive) and manage it as an USB peripheral.

Videos are in "**Video**" folder.

It is reminded that – to see videos recorded with SmartyCam on the PC – a software compatible with H.264 format is needed.
Were such software not available, it is recommended to use "VLC Media Player", which can be downloaded from www.videolan.org/vlc/.

7.2.2 – Viewing SmartyCam videos on the TV

To see SmartyCam videos on the TV ensure that the DVD reader is compatible with "avi." Files with H.264 codec: otherwise the video file needs to be converted in a format compatible with the available reader.
For example it is possible to transform the .avi file in a DVD, using a software like "Nero" (version 8 or higher), Roxio or similar softwares.

In case the reader had no Micro SD input, it is necessary to copy the video on a DVD (or even a CD) with a simple burning software.

Chapter 8 – SmartyCam Maintenance

SmartyCam does not require any particular maintenance.

Warning: it is strongly recommended not to open the camcorder.

It is recommended to periodically check www.smartycam.com for software and/or firmware updates or – recommended option – subscribe the www.smartycam.com newsletter to receive all updates in real time.

Appendix "A" – Technical specifications

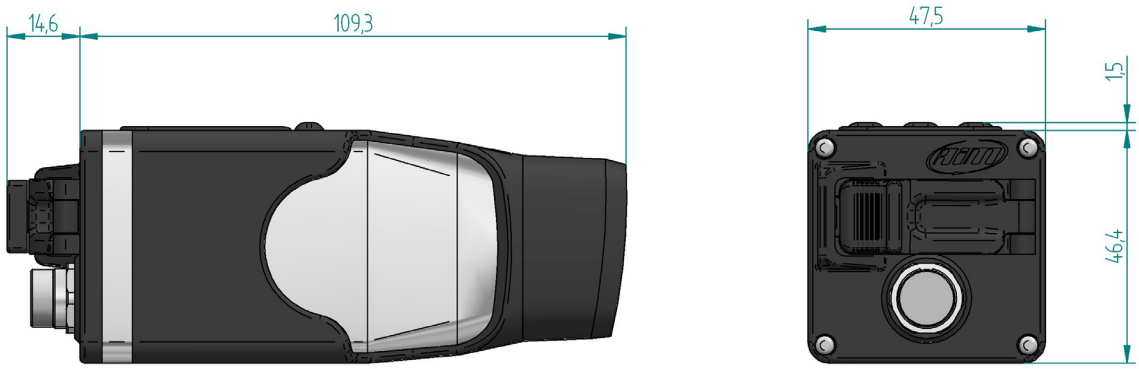

SmartyCam measures (in mm)

Accelerometer	three-axial
Internal battery	2.000 mAh 3.7 Volt lithium – rechargeable
Battery charge	via socket/via CAN: 700 mAh max
	via PC: 450 mAh max
Battery autonomy	until 3 hours with acquisition
Temperature working range	-20°C/+60°C
Display size	128*160 pixel
Weight	210g battery included
Memory	**4 Giga** (up to 16 Giga supported)
Memory consumption	1 hour recording **= about** 1 Giga

Appendix "B" – SmartyCam Pinout

N. rev. / Rev. N.	Descrizione / Description	Data / Date	Firma / Signature	Contr. da / Ckd. by

SMARTYCAM PINOUT

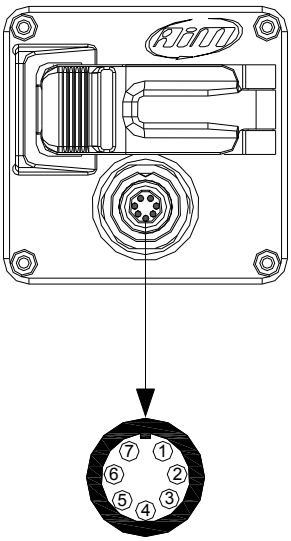

CAN Bus Binder Pinout Contact insertion view	
1	CAN+
2	GND
3	+Vb
4	CAN-
5	Vbext
6	GND
7	Mic2+

Rif. / Ref.	Q.tà/Q.ty	Material / Material		N. articolo / Item N.	
Progettato da / Designed by L.I.	Contr. da / Ckd. by	Approvato da / Approved by	Nome file / File name	Data / Date 12/01/2009	Scala / Scale
Racing Data Power		Titolo / Title **Pinout SmartyCam**			
		N. disegno / Drawing N.		Rev. / Rev.	Foglio / Sheet **1 of 1**

Appendix “C” – SmartyCam cables Pinout

N.rev. / Rev. N.	Descrizione / Description	Data / date	Firma / Sign	Contr. da / Ckd. by

External power for SmartyCam pinout

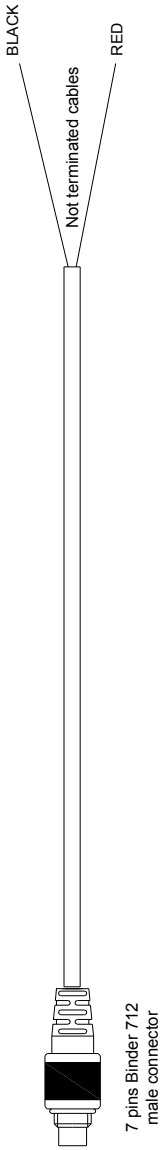

Not terminated cables pinout

Cable colour	Fonction
Nero	GND
Rosso	+Vbext

7 pins Binder 712
male connector pinout
Contact insertion view

Pin	Function
1	nc
2	GND
3	nc
4	nc
5	+Vbext
6	nc
7	nc

Rif. / Ref.	Q.tà / Q.ty	Materiale / Material		N. articolo / Item N.	
Progettato da / Designed by: D.B.	Contr. da / Ckd. by	Approvato da / Approved by	Nome file / File name	Data / Date	Scala / Scale
Racing Data Power		Titolo / Title: Cavo alimentazione esterna per SmartyCam			
		N. disegno / Drawing N.: 04.556.03		Rev. / Rev.	Foglio / Sheet: 1 of 1

N.rev. / Rev. N.	Descrizione / Description	Data / date	Firma / Sign	Contr. da / Ckd. by

CAN and power adapter cable for SmartyCam pinout

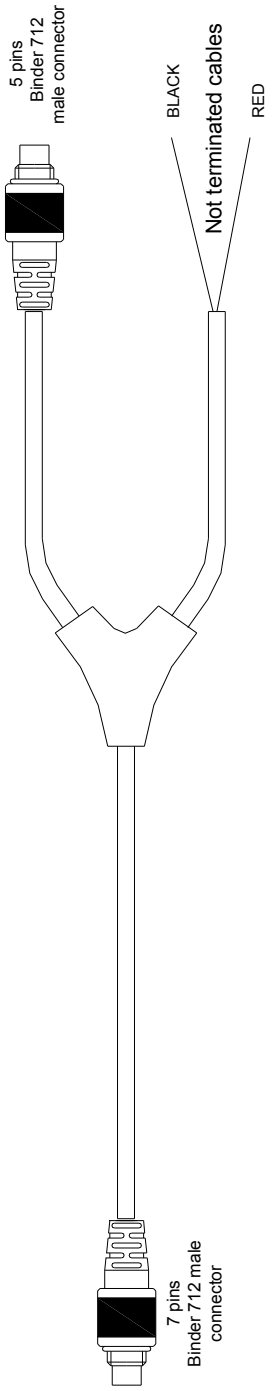

Not terminated cables pinout

Colore cavo	Function
Black	GND
Red	+Vbext

5 pins Binder 712 male connector pinout Contact insertion view

Pin	Function
1	CAN+
2	nc
3	+Vb
4	CAN-
5	nc

7 pins Binder 712 male connector pinout Contact insertion view

Pin	Function
1	CAN+
2	GND
3	+Vb
4	CAN-
5	Vbext
6	nc
7	nc

Rif. / Ref.	Q.tà / Q.ty	Materiale / Material		N. articolo / Item N.	
Progettato da / Designed by: D.B.	Contr. da / Ckd. by	Approvato da / Approved by	Nome file / File name	Data / Date	Scala / Scale
Racing Data Power	Titolo / Title: Cavo alimentazione e CAN per SmartyCam				
	N. disegno / Drawing N.: 04.566.01 (cable lenght 4m) 04.566.02 (cable lenght 2m)			Rev. / Rev.	Foglio / Sheet: 1 of 1

Appendix "D" – ECU Bridge Pinout

N.rev. / Rev. N.	Descrizione / Description	Data / date	Firma / Sign	Contr. da / Ckd. by

Pinout of ECU Bridge for SmartyCam: CAN/RS232 protocol

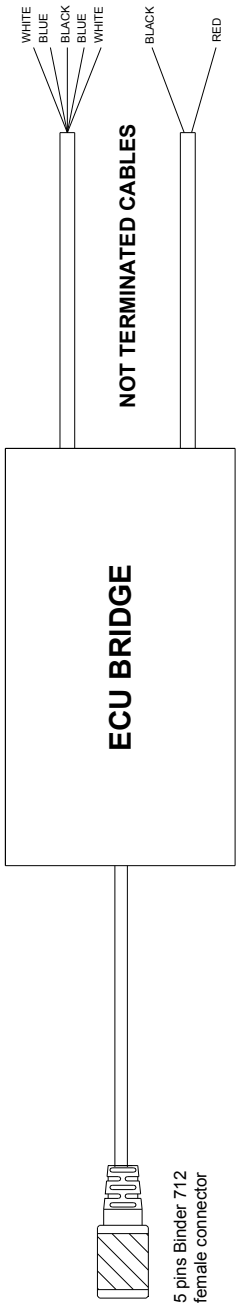

Not terminated cables pinout	
Cable colour	**Fonction**
White	CAN1+
Blue	CAN1-
Black	GND
Blue	RS232TX
White	RS232RX
Black	GND
Red	+Vbext

5 pins Binder 712 female connector pinout contact insertion view	
Pin	Fonction
1	CAN+
2	GND
3	+Vb
4	CAN-
5	Vbext

Rif. / Ref.	Q.tà / Q.ty	Materiale / Material		N. articolo / Item N.	
Progettato da / Designed by **L.I.**	Contr. da / Ckd. by	Approvato da / Approved by	Nome file / File name	Data / Date	Scala / Scale
Racing Data Power		Titolo / Title Collegamento cavi SmartyCam -ECU Bridge protocollo CAN/RS232			
		N. disegno / Drawing N.		Rev. / Rev.	Foglio / Sheet 1 of 1

N. rev. / Rev. N.	Descrizione / Description	Data / Date	Firma / Signature	Contr. da / Ckd. by

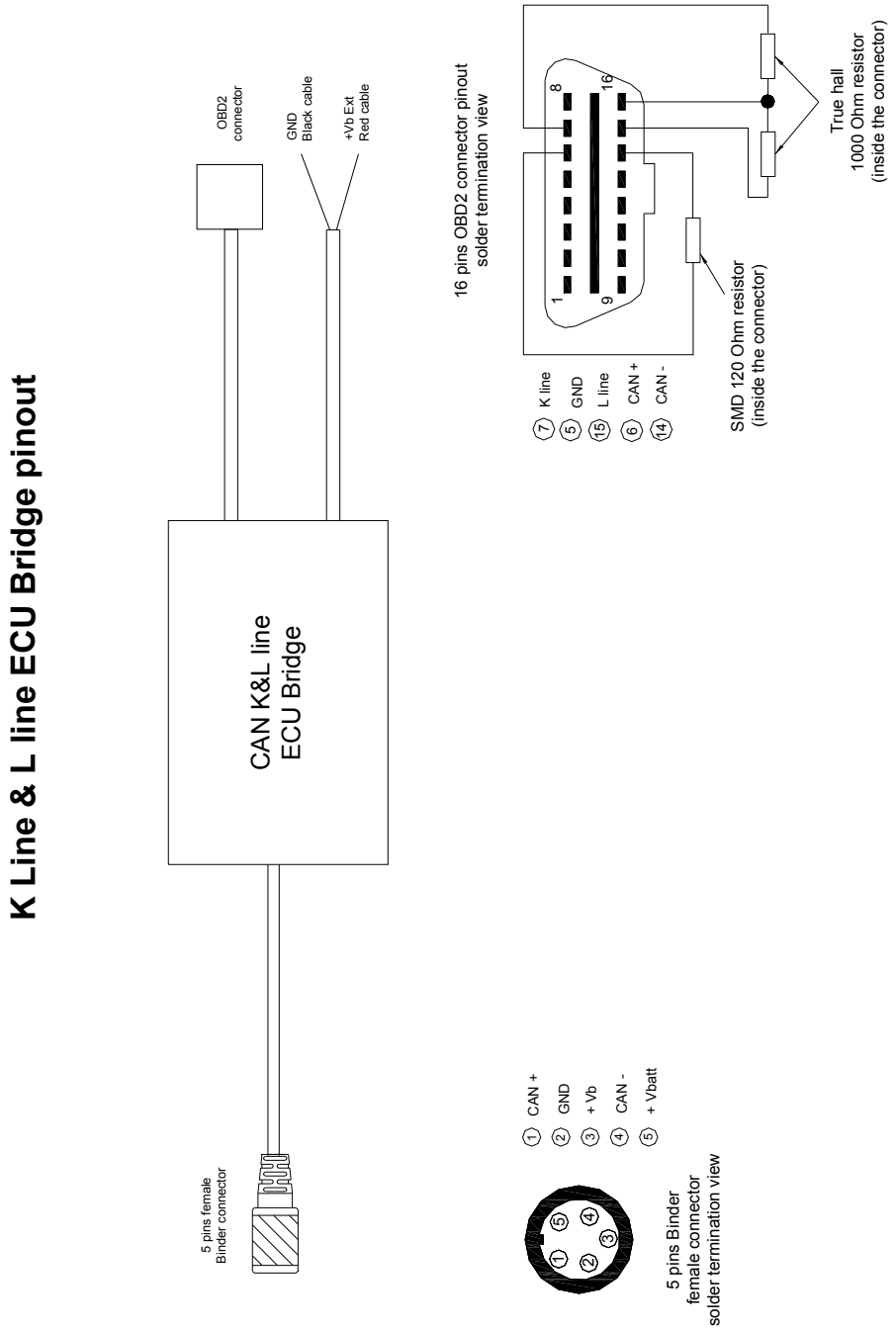

Rif. / Ref.	Q.tà/Q.ty	Material / Material		N. articolo / Item N.	
Progettato da / Designed by L.I.	Contr. da / Ckd. by	Approvato da / Approved by	Nome file / File name	Data / Date	Scala / Scale
Racing Data Power		Titolo / Title: Pinout ECU Bridge CAN linea K &L			
		N. disegno / Drawing N.		Rev. / Rev.	Foglio / Sheet 1 of 1

Appendix “E” – SmartyCam with external power

N. rev. / Rev. N.	Descrizione / Description	Data / Date	Firma / Signature	Contr. da / Ckd. by

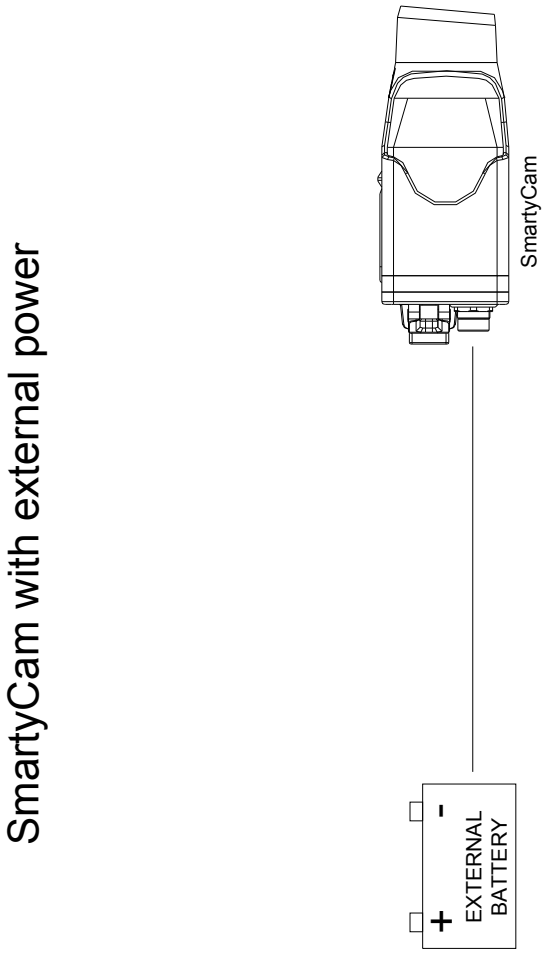

Rif. / Ref.	Q.tà/Q.ty	Material / Material		N. articolo / Item N.	
Progettato da / Designed by	Contr. da / Ckd. by	Approvato da / Approved by	Nome file / File name	Data / Date	Scala / Scale
Racing Data Power		Titolo / Title: SmartyCam con alimentazione esterna			
		N. disegno / Drawing N.		Rev. / Rev.	Foglio / Sheet 1 of 1

Appendix "F" – Connection scheme with AIM loggers

F.1 – SmartyCam – ECU Bridge connection scheme

N. rev. / Rev. N.	Descrizione / Description	Data / Date	Firma / Signature	Contr. da / Ckd. by

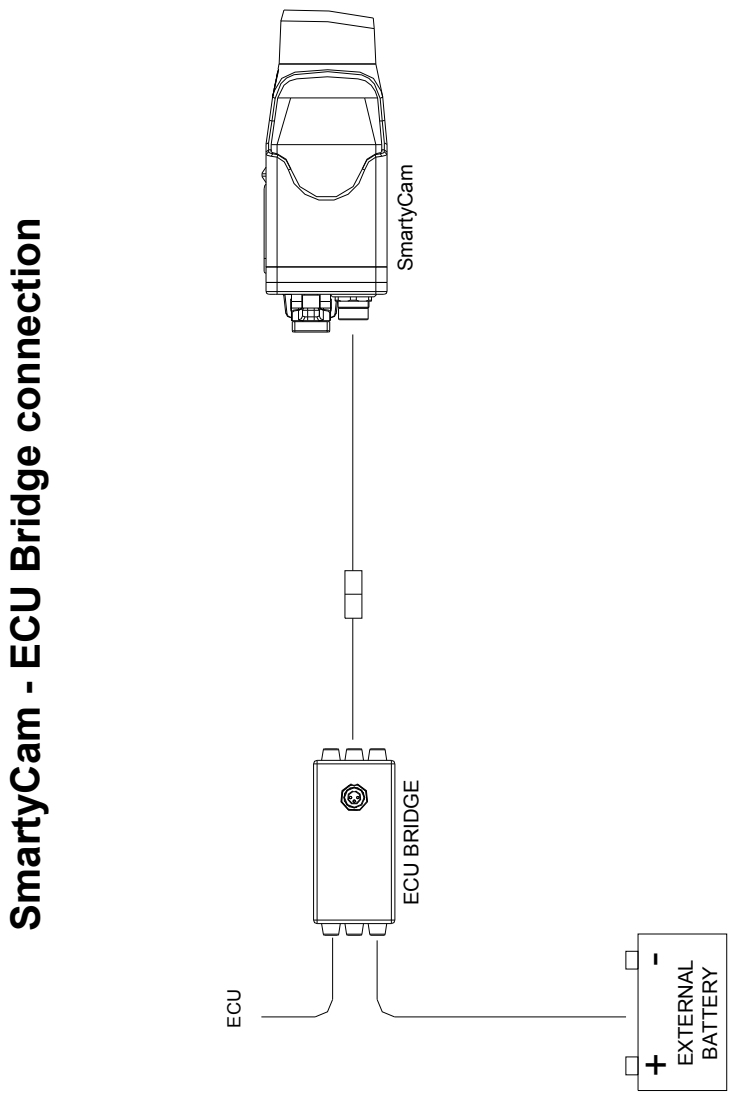

Rif. / Ref.	Q.tà/Q.ty	Material / Material		N. articolo / Item N.	
Progettato da / Designed by	Contr. da / Ckd. by	Approvato da / Approved by	Nome file / File name	Data / Date	Scala / Scale
Racing Data Power		Titolo / Title: **Collegamento SmartyCam -ECU Bridge**			
		N. disegno / Drawing N.		Rev. / Rev.	Foglio / Sheet 1 of1

N. rev. / Rev. N.	Descrizione / Description	Data / Date	Firma / Signature	Contr. da / Ckd. by

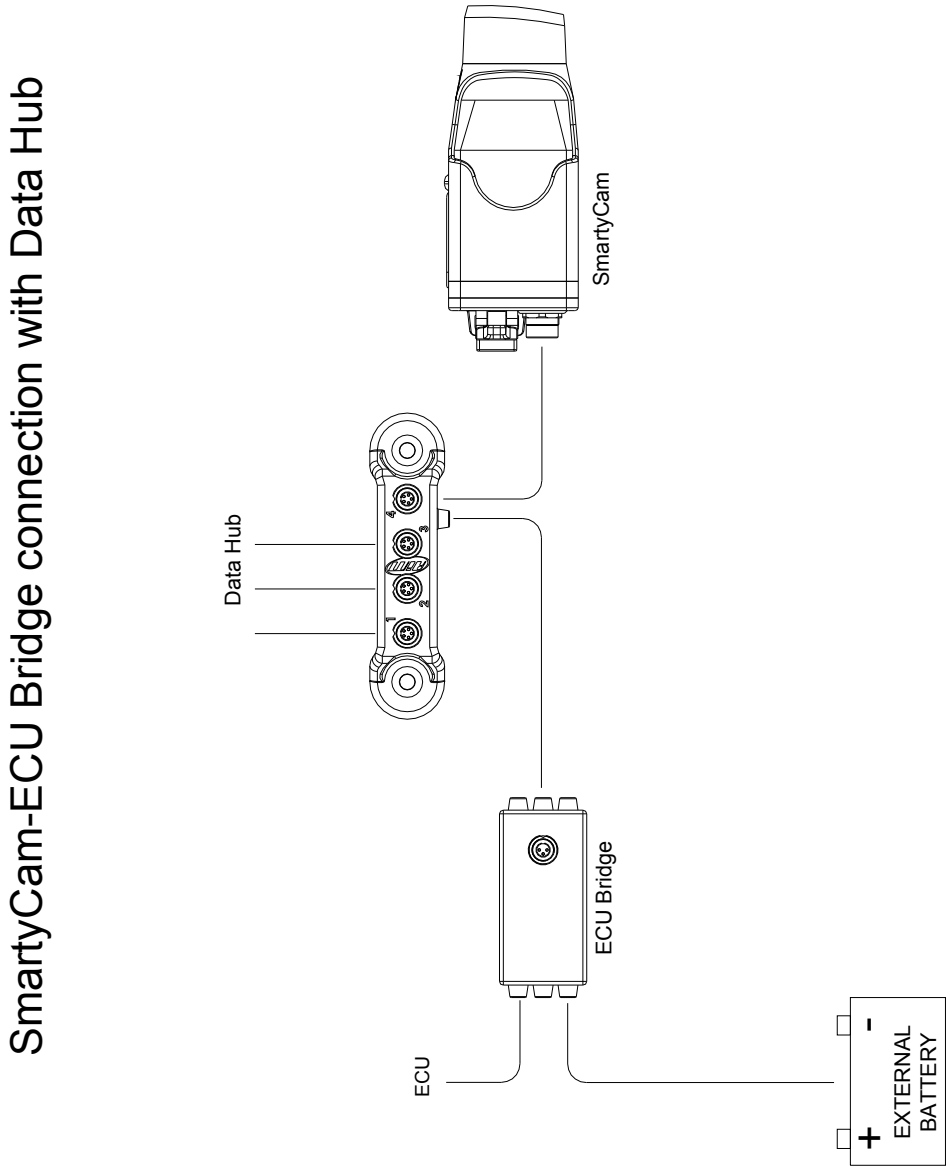

Rif. / Ref.	Q.tà/Q.ty	Material / Material		N. articolo / Item N.	
Progettato da / Designed by	Contr. da / Ckd. by	Approvato da / Approved by	Nome file / File name	Data / Date	Scala / Scale
Racing Data Power		Titolo / Title: Collegamento SmartyCam + ECU bridge con Data Hub			
		N. disegno / Drawing N.		Rev. / Rev.	Foglio / Sheet 1 of 1

F.2 – SmartyCam – MXL connection scheme

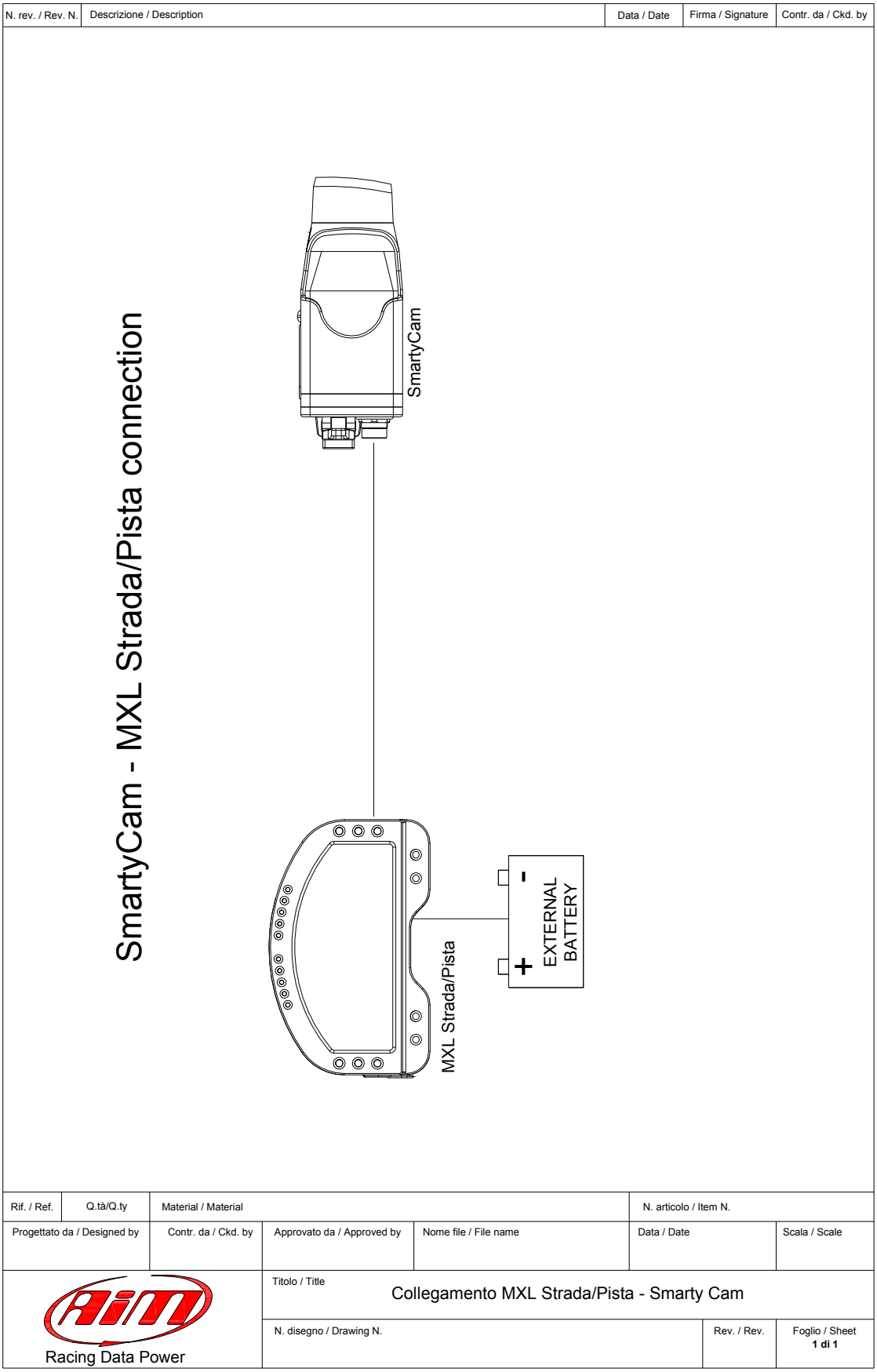

N. rev. / Rev. N.	Descrizione / Description	Data / Date	Firma / Signature	Contr. da / Ckd. by

SmartyCam - MXL Strada/Pista connection with Data Hub

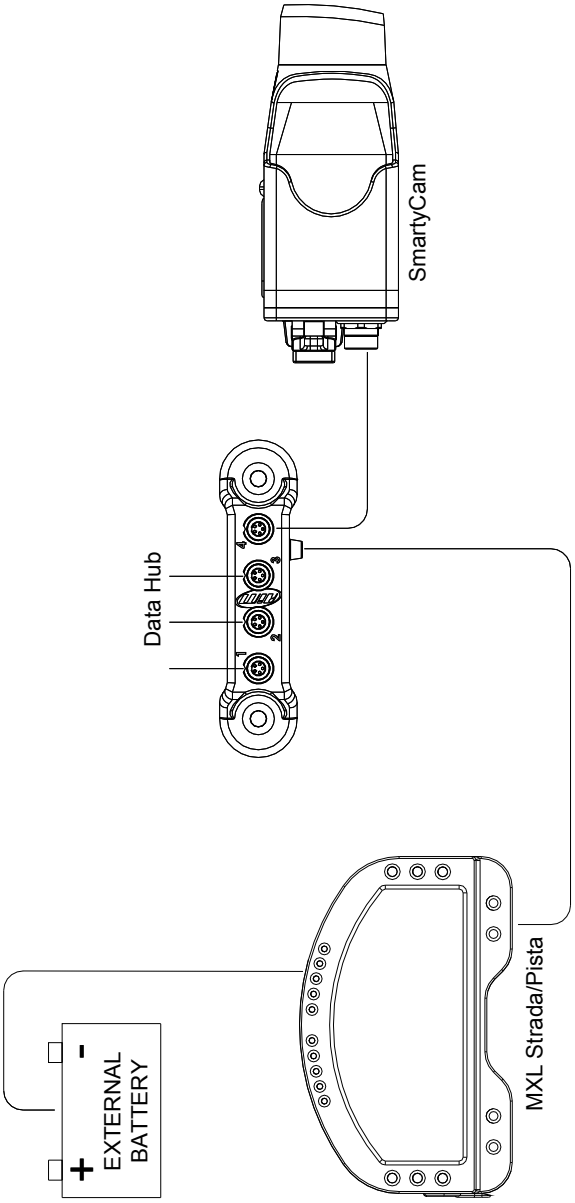

Rif. / Ref.	Q.tà/Q.ty	Material / Material		N. articolo / Item N.	
Progettato da / Designed by	Contr. da / Ckd. by	Approvato da / Approved by	Nome file / File name	Data / Date	Scala / Scale
Racing Data Power		Titolo / Title: Collegamento MXL Pista/Strada - SmartyCam con Data Hub			
		N. disegno / Drawing N.		Rev. / Rev.	Foglio / Sheet 1 of 1

N. rev. / Rev. N.	Descrizione / Description	Data / Date	Firma / Signature	Contr. da / Ckd. by

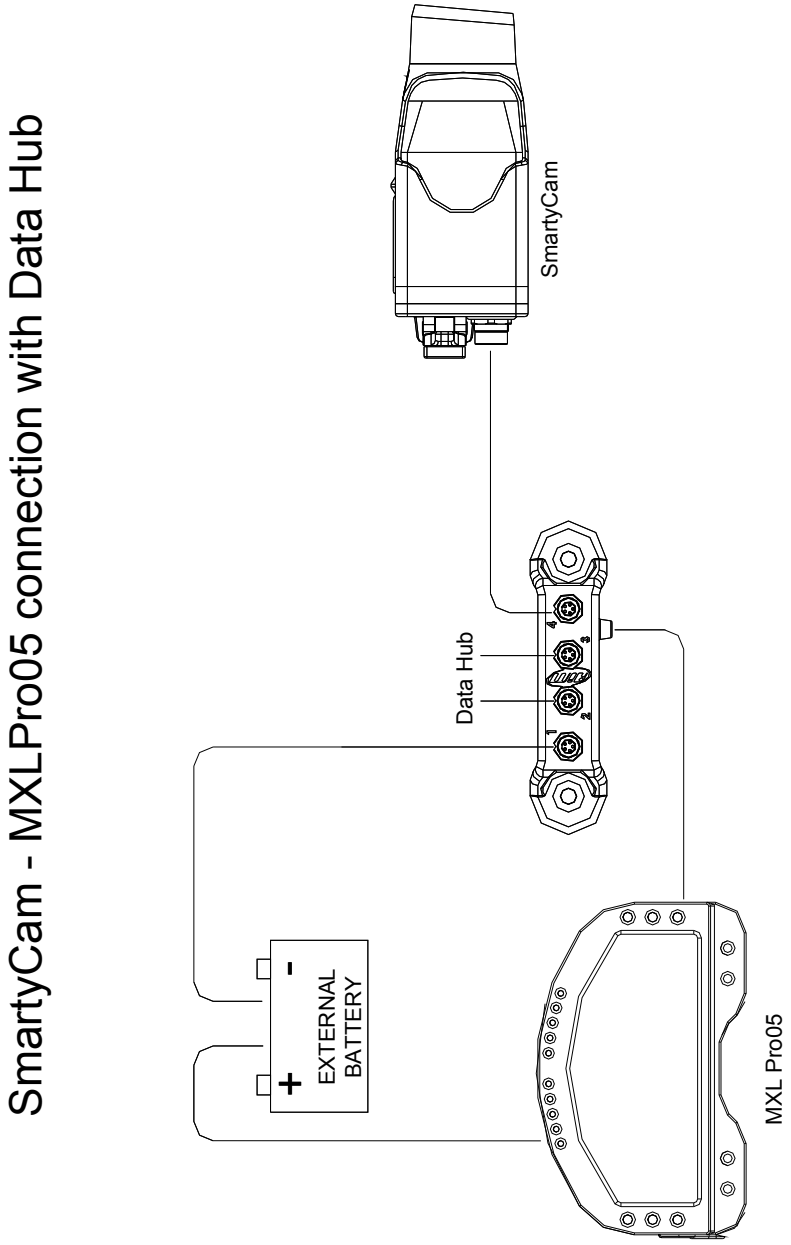

Rif. / Ref.	Q.tà/Q.ty	Material / Material		N. articolo / Item N.	
Progettato da / Designed by	Contr. da / Ckd. by	Approvato da / Approved by	Nome file / File name	Data / Date	Scala / Scale
Racing Data Power		Titolo / Title: Collegmento MXL Pro05 - SmartyCam con Data Hub			
		N. disegno / Drawing N.		Rev. / Rev.	Foglio / Sheet 1 di 1

F.3 – SmartyCam – EVO3 connection scheme

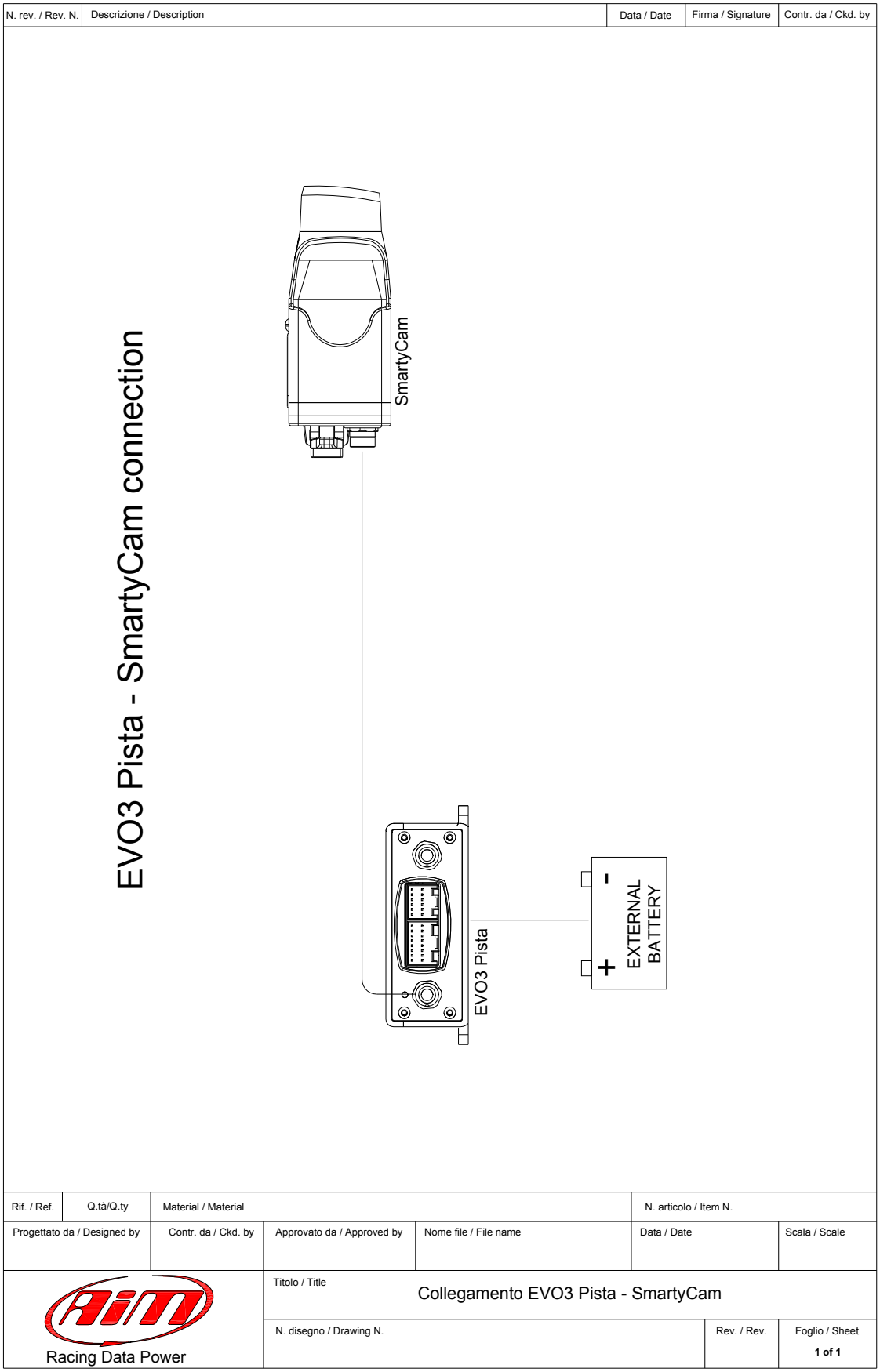

N. rev. / Rev. N.	Descrizione / Description	Data / Date	Firma / Signature	Contr. da / Ckd. by

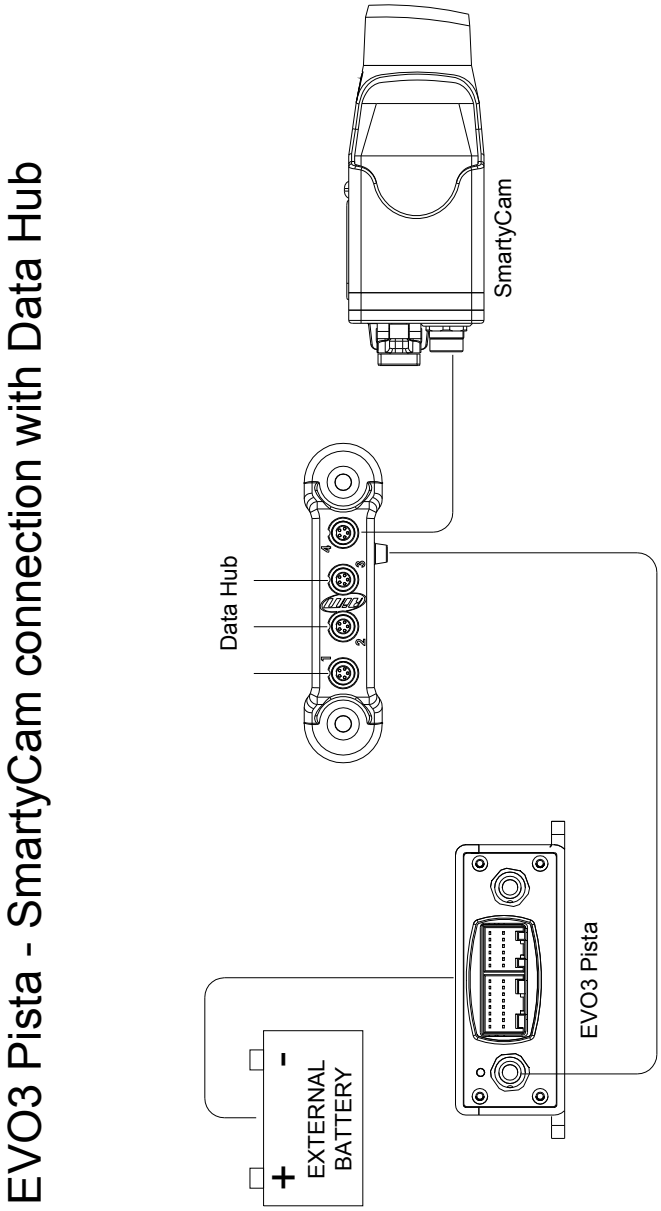

Rif. / Ref.	Q.tà/Q.ty	Material / Material		N. articolo / Item N.	
Progettato da / Designed by	Contr. da / Ckd. by	Approvato da / Approved by	Nome file / File name	Data / Date	Scala / Scale
Racing Data Power		Titolo / Title: Collegamento EVO3 Pista - SmartyCam con Data Hub			
		N. disegno / Drawing N.		Rev. / Rev.	Foglio / Sheet 1 of 1

N. rev. / Rev. N.	Descrizione / Description	Data / Date	Firma / Signature	Contr. da / Ckd. by

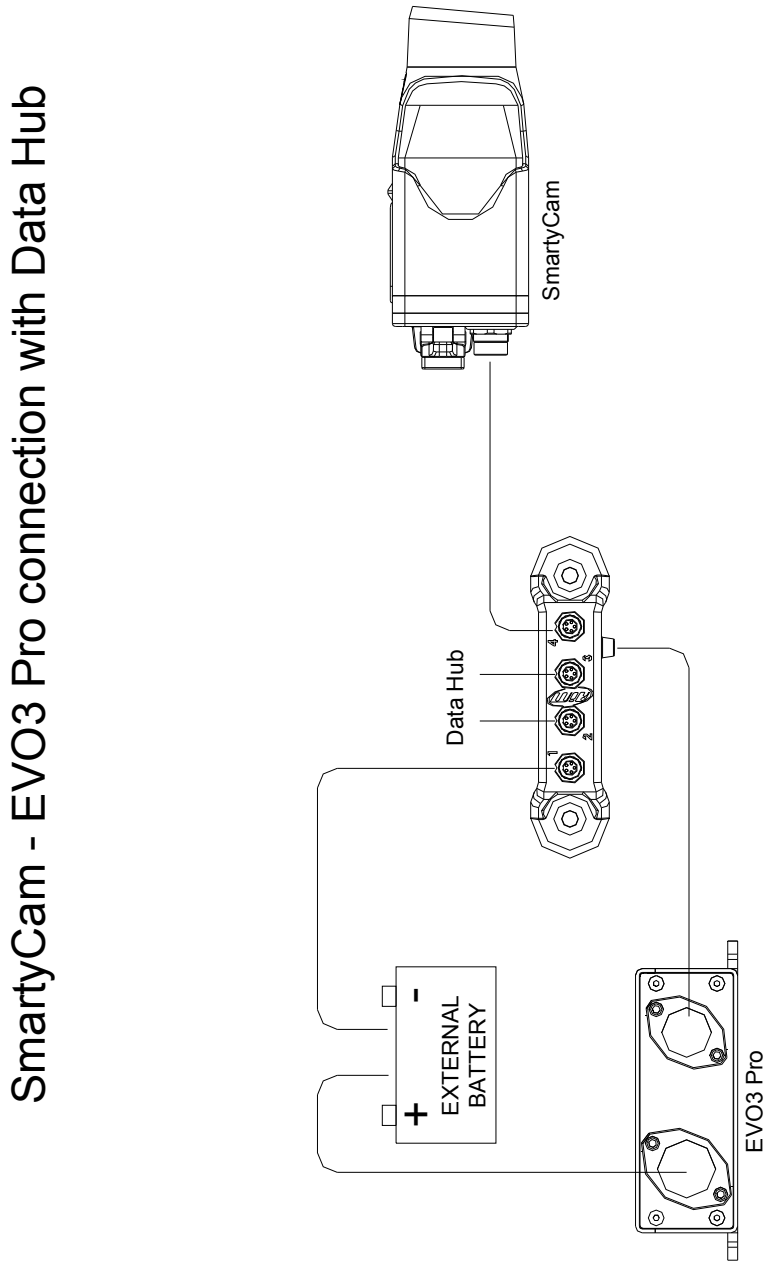

Rif. / Ref.	Q.tà/Q.ty	Material / Material		N. articolo / Item N.	
Progettato da / Designed by	Contr. da / Ckd. by	Approvato da / Approved by	Nome file / File name	Data / Date	Scala / Scale
Racing Data Power		Titolo / Title: Collegamento EVO3Pro-SmartyCam+DataHub			
		N. disegno / Drawing N.		Rev. / Rev.	Foglio / Sheet 1 of 1

F.4 – SmartyCam – EVO4 connection scheme

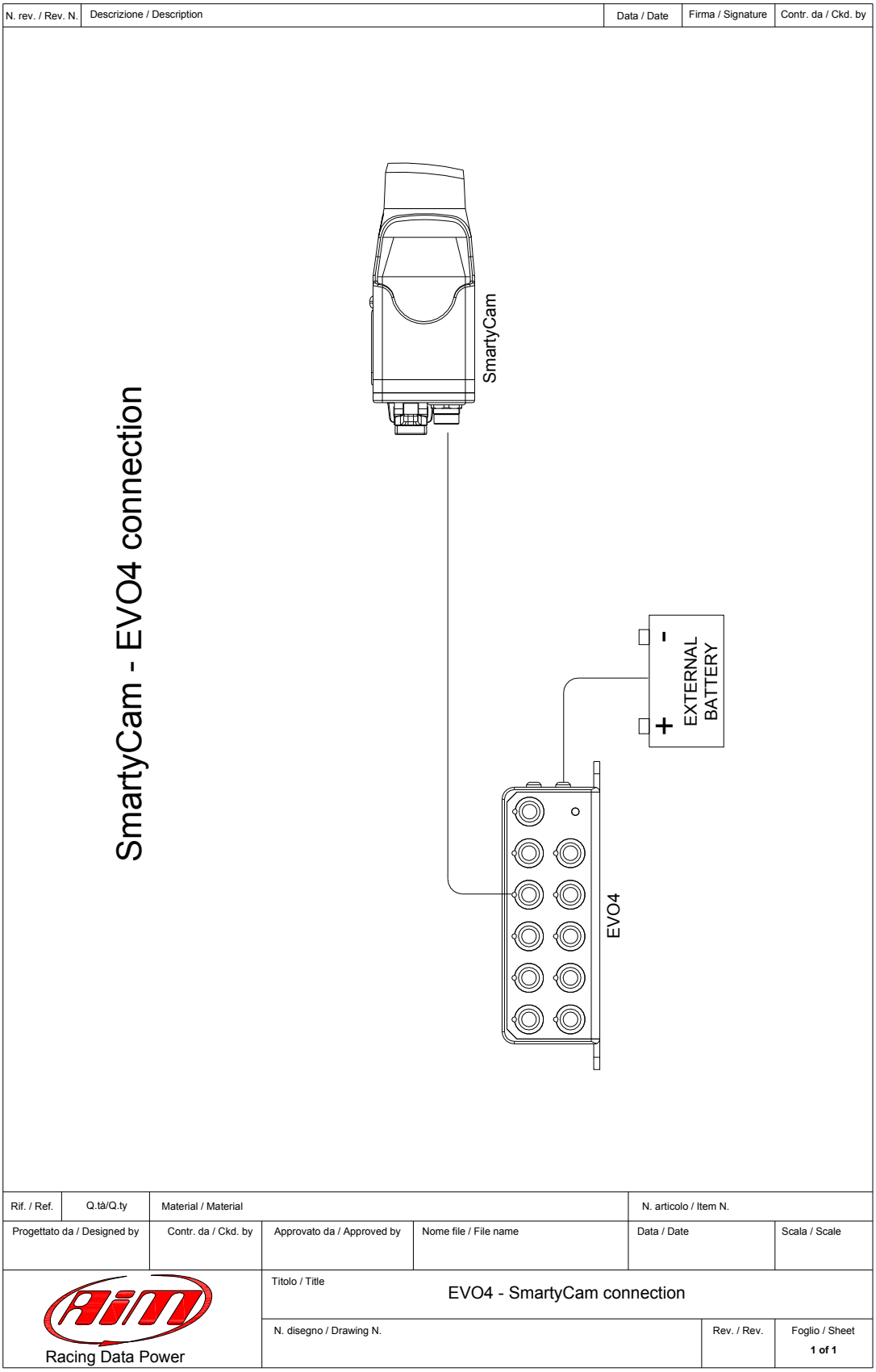

N. rev. / Rev. N.	Descrizione / Description	Data / Date	Firma / Signature	Contr. da / Ckd. by

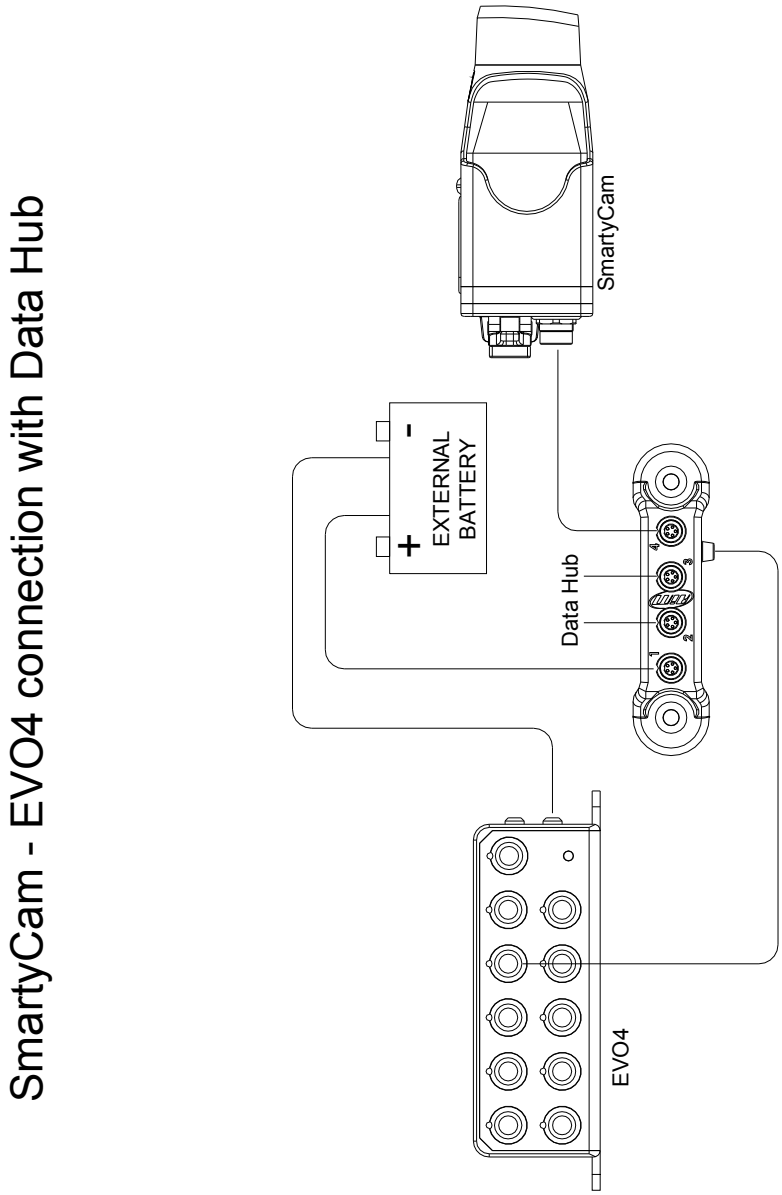

Rif. / Ref.	Q.tà/Q.ty	Material / Material		N. articolo / Item N.	
Progettato da / Designed by	Contr. da / Ckd. by	Approvato da / Approved by	Nome file / File name	Data / Date	Scala / Scale
Racing Data Power		Titolo / Title: Collegamento EVO4 - SmartyCam con Data Hub			
		N. disegno / Drawing N.		Rev. / Rev.	Foglio / Sheet 1 of 1

N. rev. / Rev. N.	Descrizione / Description	Data / Date	Firma / Signature	Contr. da / Ckd. by

SmartyCam - EVO4 connection with Data Hub and Lambda Controller

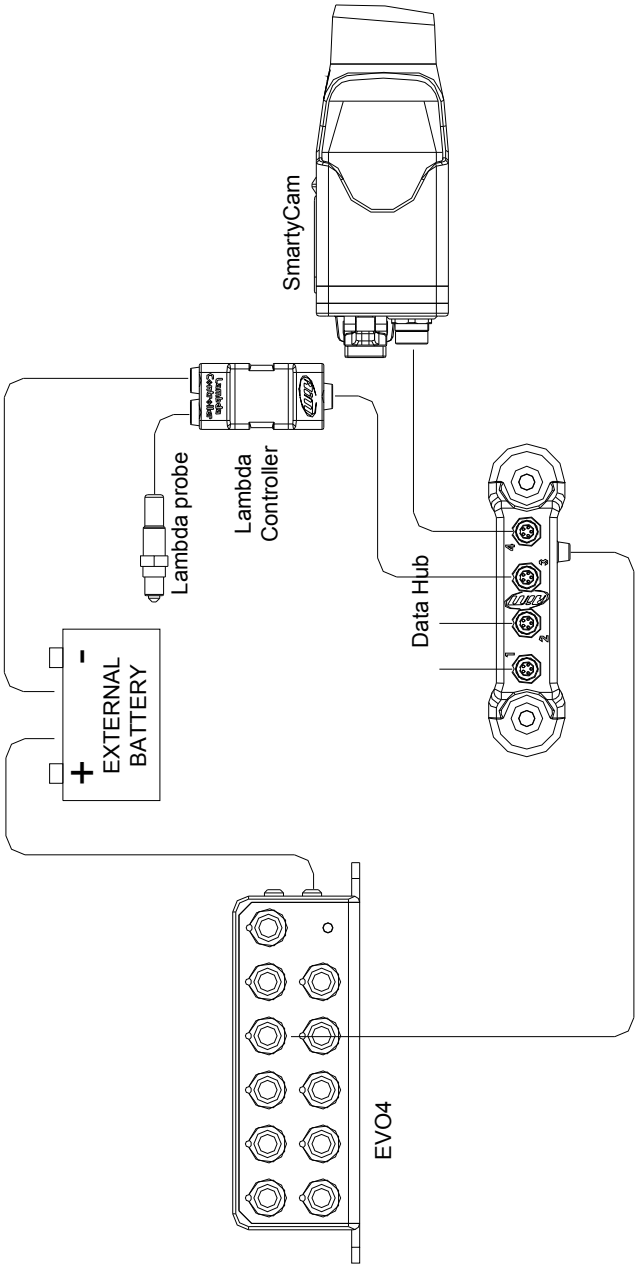

Rif. / Ref.	Q.tà/Q.ty	Material / Material		N. articolo / Item N.	
Progettato da / Designed by	Contr. da / Ckd. by	Approvato da / Approved by	Nome file / File name	Data / Date	Scala / Scale
Racing Data Power		Titolo / Title: Collegamento EVO4 - SmartyCam con Data Hub e Lambda Controller			
		N. disegno / Drawing N.		Rev. / Rev.	Foglio / Sheet 1 of 1

F.5 – SmartyCam – MyChron4 connection scheme

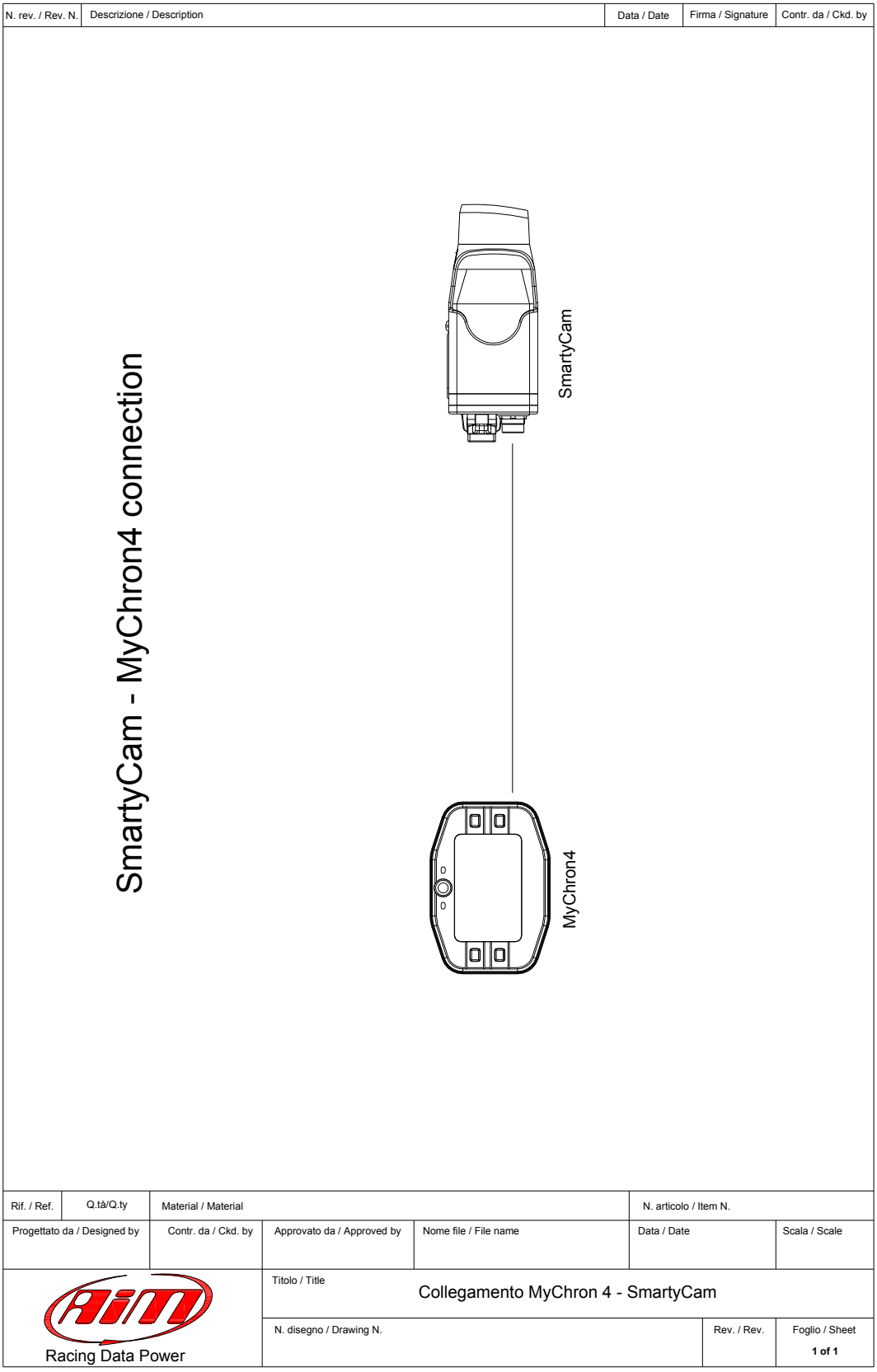

N. rev. / Rev. N.	Descrizione / Description	Data / Date	Firma / Signature	Contr. da / Ckd. by

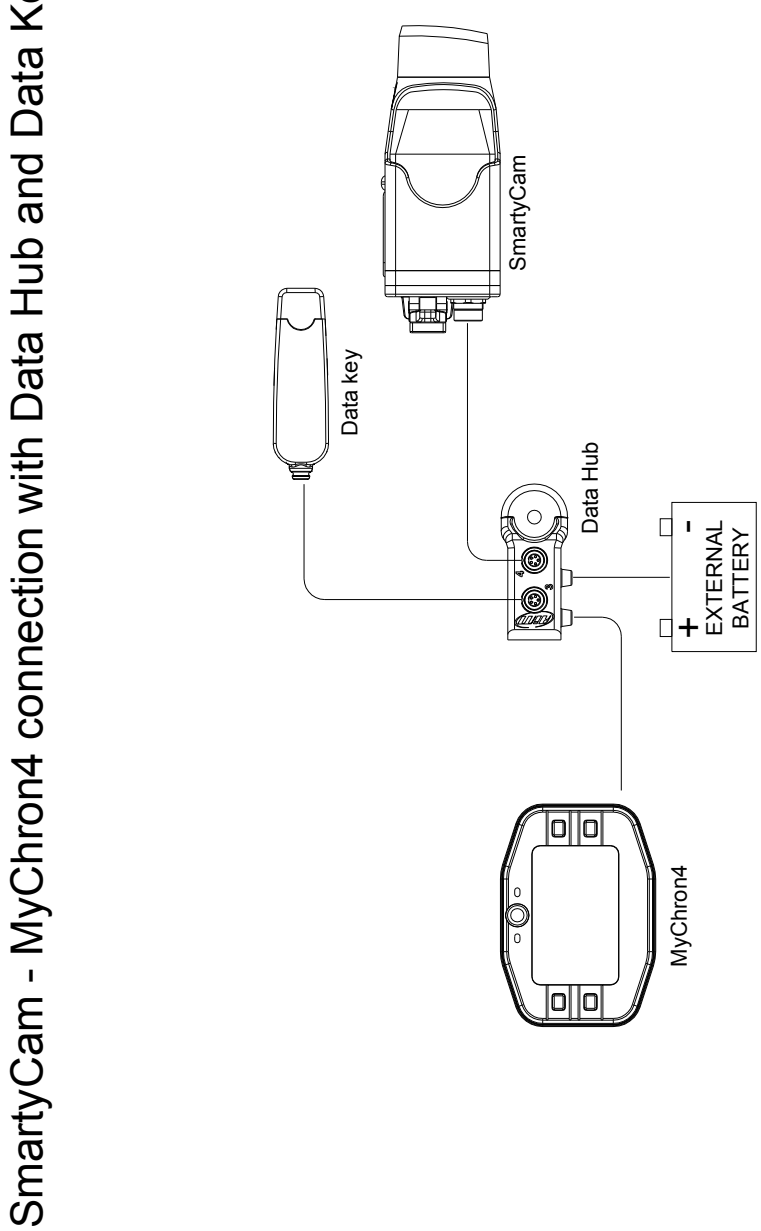

Rif. / Ref.	Q.tà/Q.ty	Material / Material		N. articolo / Item N.	
Progettato da / Designed by	Contr. da / Ckd. by	Approvato da / Approved by	Nome file / File name	Data / Date	Scala / Scale
Racing Data Power		Titolo / Title: Collegamento MyChron4 - SmartyCam con Data Hub e Data Key			
		N. disegno / Drawing N.		Rev. / Rev.	Foglio / Sheet 1 of 1

N. rev. / Rev. N.	Descrizione / Description	Data / Date	Firma / Signature	Contr. da / Ckd. by

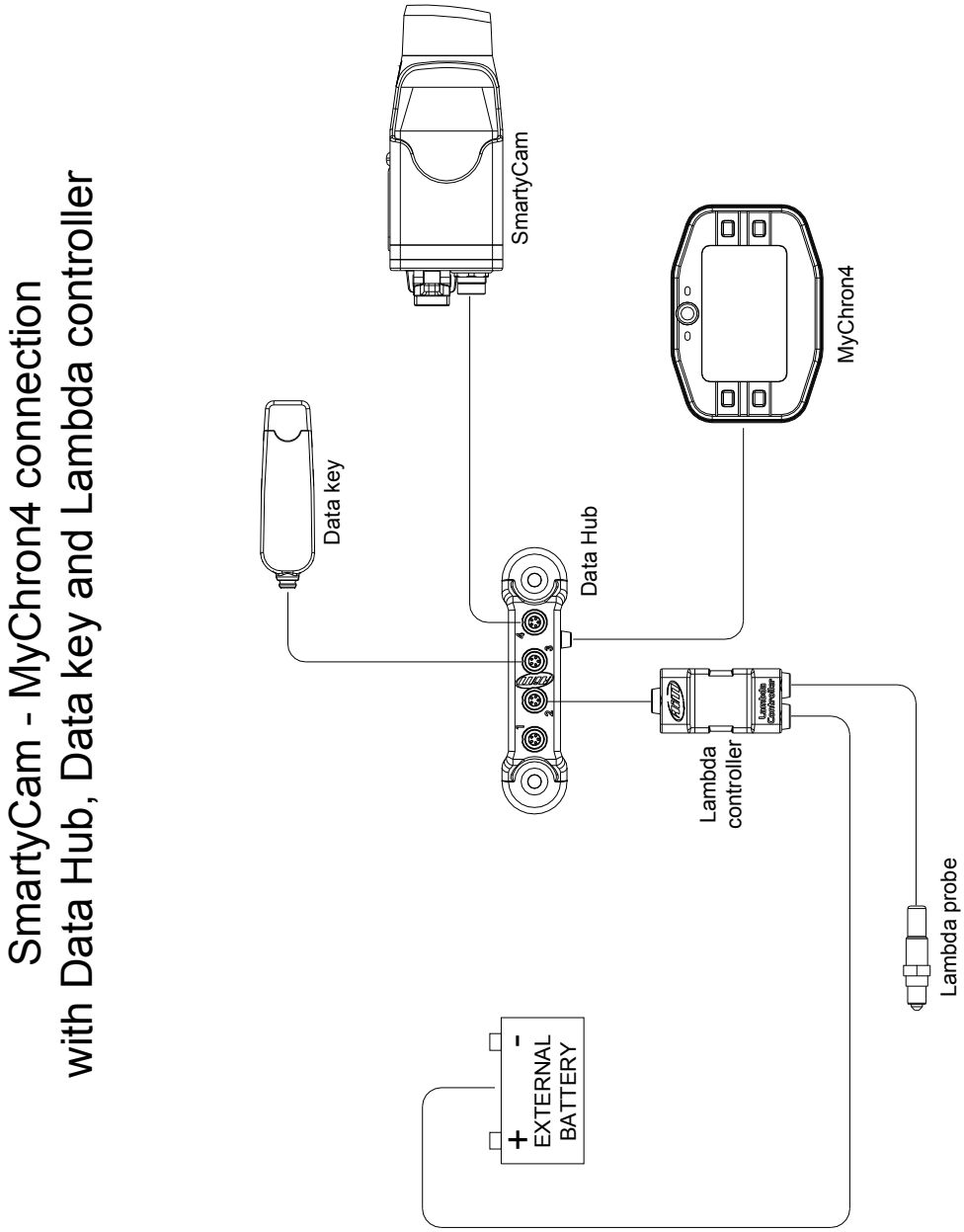

Rif. / Ref.	Q.tà/Q.ty	Material / Material		N. articolo / Item N.	
Progettato da / Designed by	Contr. da / Ckd. by	Approvato da / Approved by	Nome file / File name	Data / Date	Scala / Scale
Racing Data Power		Titolo / Title Collegamento MyChron4 - SmartyCam con Data Hub, Data Key e Lambda controller			
		N. disegno / Drawing N.		Rev. / Rev.	Foglio / Sheet 1 of 1

N. rev. / Rev. N.	Descrizione / Description	Data / Date	Firma / Signature	Contr. da / Ckd. by

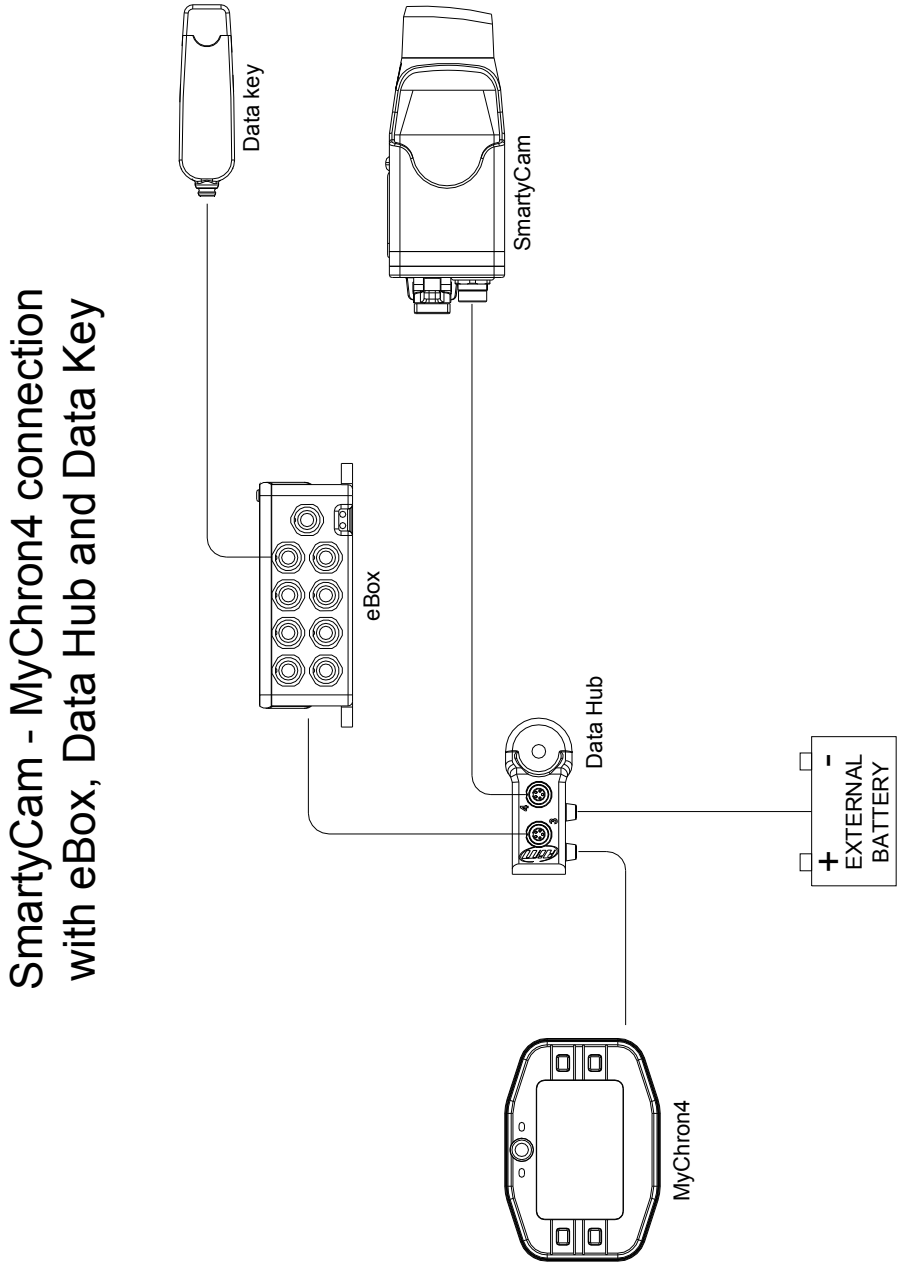

Rif. / Ref.	Q.tà/Q.ty	Material / Material		N. articolo / Item N.	
Progettato da / Designed by	Contr. da / Ckd. by	Approvato da / Approved by	Nome file / File name	Data / Date	Scala / Scale
Racing Data Power		Titolo / Title Collegamento MyChron4 - SmartyCam con eBox, Data Hub e Data Key			
		N. disegno / Drawing N.		Rev. / Rev.	Foglio / Sheet 1 of 1

N. rev. / Rev. N.	Descrizione / Description	Data / Date	Firma / Signature	Contr. da / Ckd. by

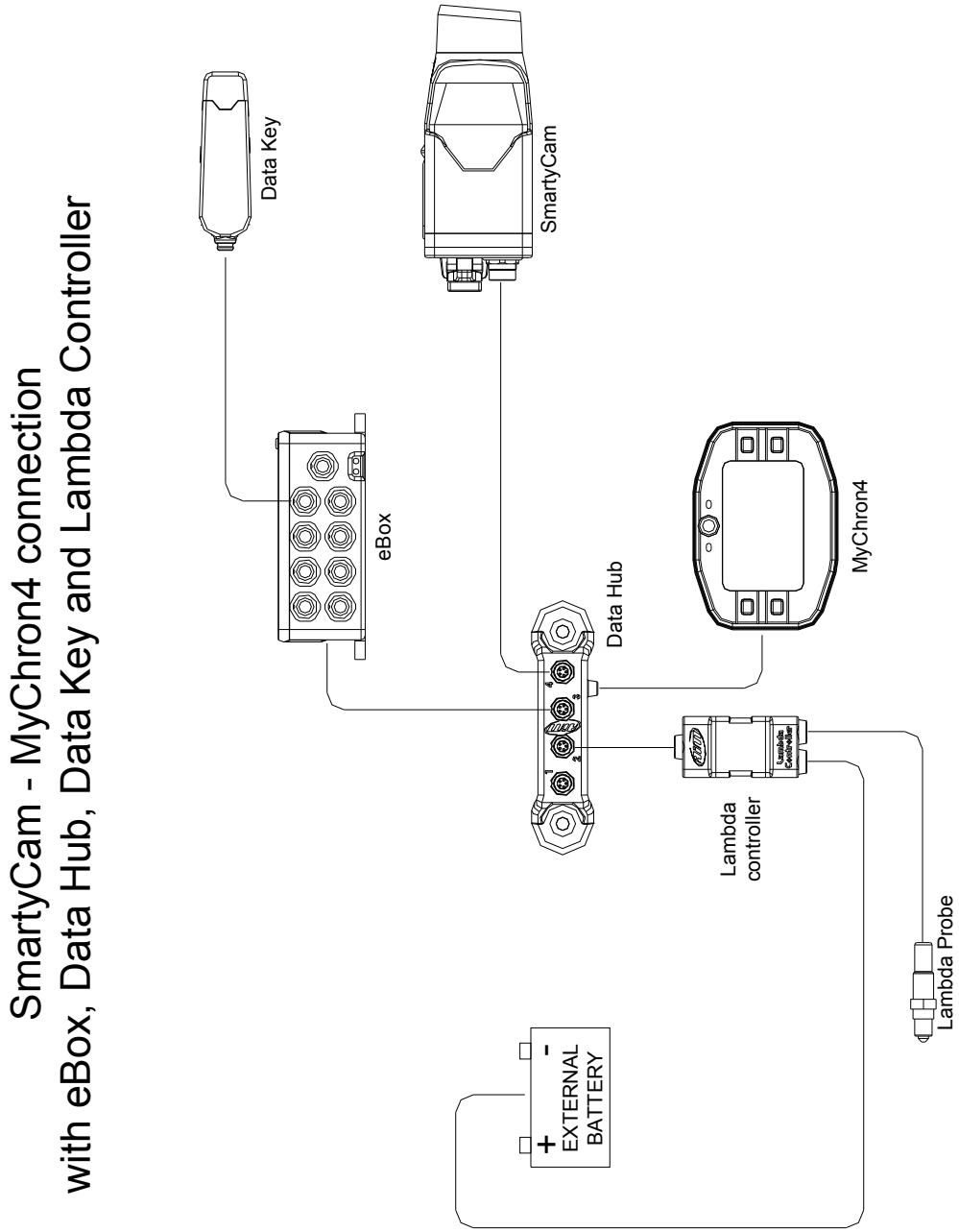

Rif. / Ref.	Q.tà/Q.ty	Material / Material		N. articolo / Item N.	
Progettato da / Designed by	Contr. da / Ckd. by	Approvato da / Approved by	Nome file / File name	Data / Date	Scala / Scale
Racing Data Power		Titolo / Title: Collegamento MyChron4 - SmartyCam con eBox, Data Hub, Data Key e Lambda Controller			
		N. disegno / Drawing N.		Rev. / Rev.	Foglio / Sheet: 1 of 1